# Product data sheet
## Characteristics

# XS608B1NAM12
## Inductive proximity sensors XS, inductive sensor XS6 M8, L62mm, stainless, Sn2.5 mm, 12...48 VDC, M12

## Main

| | |
|---|---|
| Range of product | Telemecanique Inductive proximity sensors XS |
| Series name | General purpose |
| Sensor type | Inductive proximity sensor |
| Sensor name | XS6 |
| Sensor design | Cylindrical M8 |
| Size | 62 mm |
| Body type | Fixed |
| Detector flush mounting acceptance | Flush mountable |
| Material | Stainless steel |
| Type of output signal | Discrete |
| Wiring technique | 3-wire |
| [Sn] nominal sensing distance | 2.5 mm |
| Discrete output function | 1 NO |
| Output circuit type | DC |
| Discrete output type | NPN |
| Electrical connection | Male connector M12, 4 pins |
| [Us] rated supply voltage | 12...48 V DC with reverse polarity protection |
| Switching capacity in mA | <= 200 mA DC with overload and short-circuit protection |
| IP degree of protection | IP67 conforming to IEC 60529 |

## Complementary

| | |
|---|---|
| Thread type | M8 x 1 |
| Detection face | Frontal |
| Front material | PPS |
| Enclosure material | Stainless steel 303 |
| Sensing range | > 0...2.5 mm |
| Operating zone | 0…2 mm |
| Differential travel | 1...15% of Sr |
| Status LED | Output state: 1 LED (yellow) |
| Supply voltage limits | 10…58 V DC |
| Switching frequency | <= 2500 Hz |
| Maximum voltage drop | <2 V (closed) |
| Current consumption | <= 10 mA no-load |
| Maximum delay first up | 10 ms |
| Maximum delay response | 0.2 ms |
| Maximum delay recovery | 0.2 ms |
| Marking | CE |
| Threaded length | 40 mm |
| Length | 62 mm |
| Net weight | 0.015 kg |

The information provided in this documentation contains general descriptions and/or technical characteristics of the performance of the products contained herein.
This documentation is not intended as a substitute for and is not to be used for determining suitability or reliability of these products for specific user applications.
It is the duty of any such user or integrator to perform the appropriate and complete risk analysis, evaluation and testing of the products with respect to the relevant specific application or use thereof.
Neither Schneider Electric Industries SAS nor any of its affiliates or subsidiaries shall be responsible or liable for misuse of the information contained herein.

## Environment

| | |
|---|---|
| Product certifications | CSA<br>UL |
| Ambient air temperature for operation | -25…70 °C |
| Ambient air temperature for storage | -40…85 °C |
| Vibration resistance | 25 gn amplitude = +/- 2 mm (f = 10…55 Hz) conforming to IEC 60068-2-6 |
| Shock resistance | 50 gn for 11 ms conforming to IEC 60068-2-27 |

## Packing Units

| | |
|---|---|
| Unit Type of Package 1 | PCE |
| Number of Units in Package 1 | 1 |
| Package 1 Weight | 33 g |
| Package 1 Height | 4.2 cm |
| Package 1 width | 6.7 cm |
| Package 1 Length | 9.6 cm |
| Unit Type of Package 2 | BAG |
| Number of Units in Package 2 | 1 |
| Package 2 Weight | 33 g |
| Package 2 Height | 1.2 cm |
| Package 2 width | 20 cm |
| Package 2 Length | 15 cm |
| Unit Type of Package 3 | S02 |
| Number of Units in Package 3 | 44 |
| Package 3 Weight | 1.76 kg |
| Package 3 Height | 15 cm |
| Package 3 width | 30 cm |
| Package 3 Length | 40 cm |

## Offer Sustainability

| | |
|---|---|
| Sustainable offer status | Green Premium product |
| REACh Regulation | REACh Declaration |
| EU RoHS Directive | Pro-active compliance (Product out of EU RoHS legal scope) EU RoHS Declaration |
| Mercury free | Yes |
| RoHS exemption information | Yes |
| Environmental Disclosure | Product Environmental Profile |
| Circularity Profile | End Of Life Information |

## Contractual warranty

| | |
|---|---|
| Warranty | 18 months |

# XS608B1NAM12

## Dimensions

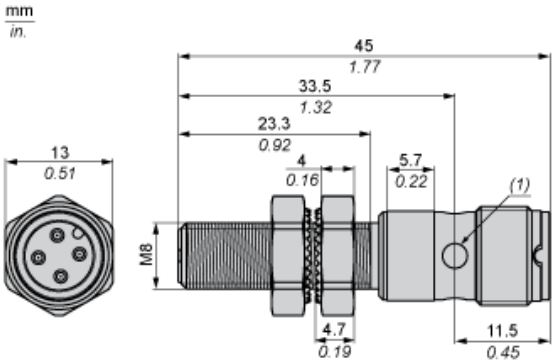


(1) LED

## Minimum Mounting Distances in mm

Side by side

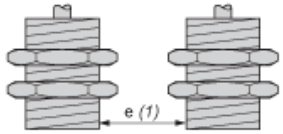


e (1) 5 mm/0.20 in.
≥

Face to face

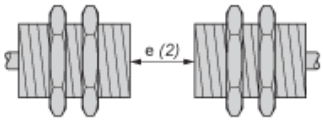


e (2) 30 mm/1.18 in.
≥

Facing a metal object

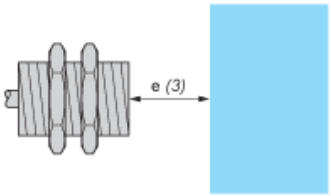


e (3) 8 mm/0.31 in.
≥

## Wiring Schemes

M12 connector

NPN

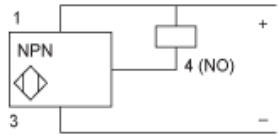


1 : (+)
2 : Not connected
3 : (-)
4 : NO Output

## Performance Curves

### Standard Steel Target (mm) : 8x8x1

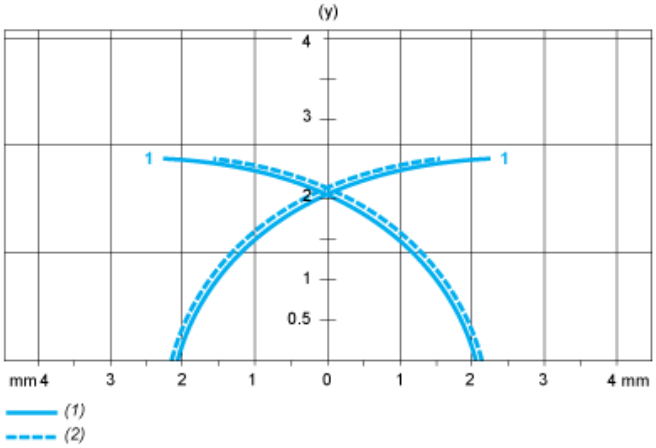


(1) Pick-up points
(2) Drop-out points (object approaching from the side)
(y) Sensing distance in mm