Product data sheet
Characteristics

XS1M30MB250L1
Inductive proximity sensors XS, inductive sensor XS1 M30, L60mm, brass, Sn10mm, 24...240VAC/DC, cable 5 m

Main

Range of product	Telemecanique Inductive proximity sensors XS
Series name	General purpose
Sensor type	Inductive proximity sensor
Wiring configuration	2-wire
Output circuit type	AC/DC
Protection type	Short-circuit protection multi voltage
Device application	2-wire DC short-circuit protection
Sensor name	XS1
Sensor design	Cylindrical M30
Size	60 mm
Body type	Fixed
Detector flush mounting acceptance	Flush mountable
Material	Metal
Type of output signal	Discrete
Wiring technique	2-wire
[Sn] nominal sensing distance	10 mm
Discrete output function	1 NC
Electrical connection	Cable
Cable length	5 m
[Us] rated supply voltage	24...210 V DC 24...240 V AC 50/60 Hz
Switching capacity in mA	5...300 mA AC with overload and short-circuit protection 5...200 mA DC with overload and short-circuit protection
IP degree of protection	IP68 double insulation conforming to IEC 60529

Complementary

Thread type	M30 x 1.5
Detection face	Frontal
Front material	PPS
Enclosure material	Nickel plated brass
Operating zone	0…8 mm
Differential travel	1...15% of Sr
Cable composition	2 x 0.34 mm²
Wire insulation material	PvR
Status LED	Output state: 1 LED (yellow) Supply on: 1 LED (green)
Supply voltage limits	20…264 V AC/DC
Maximum residual current	1.5 mA open state
Switching frequency	<= 2000 Hz DC <= 25 Hz AC
Maximum voltage drop	<5.5 V (closed state)
Maximum delay first up	70 ms
Maximum delay response	2 ms

The information provided in this documentation contains general descriptions and/or technical characteristics of the performance of the products contained herein.
This documentation is not intended as a substitute for and is not to be used for determining suitability or reliability of these products for specific user applications.
It is the duty of any such user or integrator to perform the appropriate and complete risk analysis, evaluation and testing of the products with respect to the relevant specific application or use thereof.
Neither Schneider Electric Industries SAS nor any of its affiliates or subsidiaries shall be responsible or liable for misuse of the information contained herein.

Maximum delay recovery	5 ms
Marking	CE
Threaded length	51 mm
Length	60 mm
Net weight	0.325 Kg 0.205 kg

Environment

Product certifications	CCC CSA UL
Ambient air temperature for operation	-25…70 °C
Ambient air temperature for storage	-40…85 °C
Vibration resistance	25 gn amplitude = +/- 2 mm (f = 10…55 Hz) conforming to IEC 60068-2-6
Shock resistance	50 gn for 11 ms conforming to IEC 60068-2-7

Packing Units

Unit Type of Package 1	PCE
Number of Units in Package 1	1
Package 1 Weight	335 g
Package 1 Height	8 cm
Package 1 width	8 cm
Package 1 Length	14.8 cm

Offer Sustainability

Sustainable offer status	Green Premium product
REACh Regulation	REACh Declaration
EU RoHS Directive	Pro-active compliance (Product out of EU RoHS legal scope) EU RoHS Declaration
Mercury free	Yes
RoHS exemption information	Yes
Environmental Disclosure	Product Environmental Profile
Circularity Profile	End Of Life Information

Contractual warranty

Warranty	18 months

XS1M30MB250L1

Dimensions

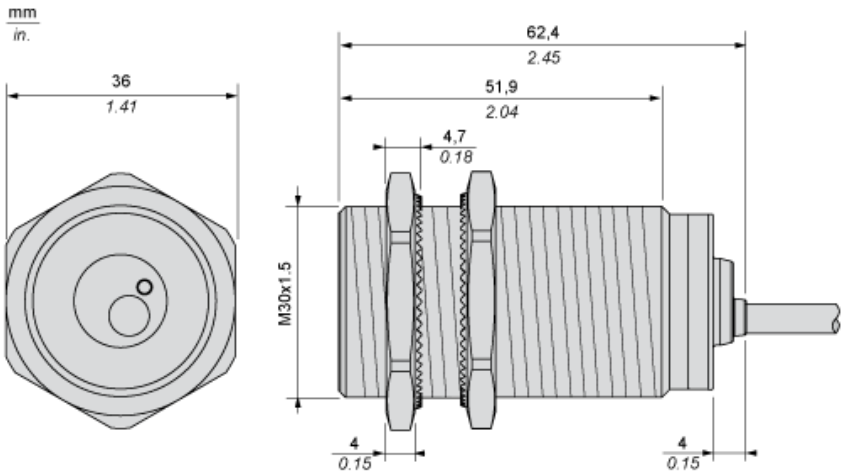

Minimum Mounting Distances

Side by side

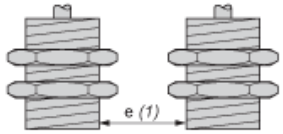

e (1) 20 mm/0.79 in
≥

Face to face

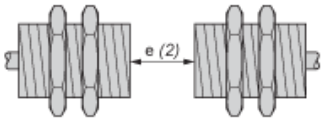

e (2) 120 mm/4.72 in
≥

Facing a metal object

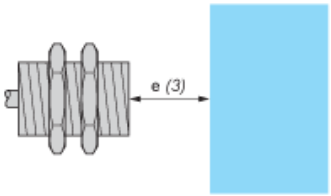

e (3) 30 mm/1.18 in.
≥

Wiring Schemes

2-Wire AC or DC

NC output

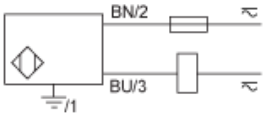

BU : Blue
BN : Brown

Performance Curves

Standard Steel Target : 30x30x1 mm

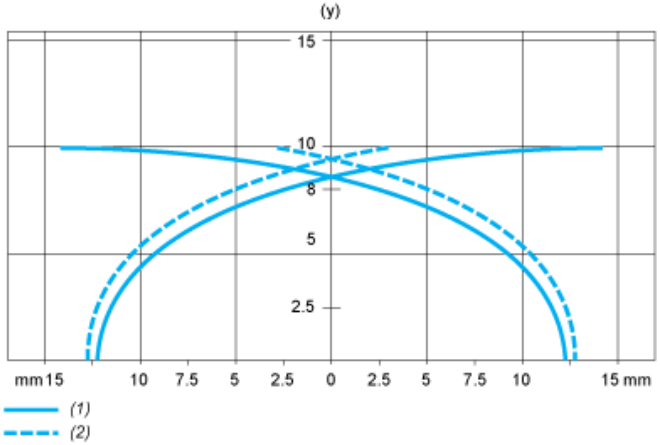

(1) Pick-up points
(2) Drop-out points (object approaching from the side)
(y) Sensing distance in mm