Product data sheet
Characteristics

KTC1350LP5E1
Flat elbow, Canalis KTC, copper, 1350A, 3L+N +PER (Al), N1, 2 made to measure branches, right angle

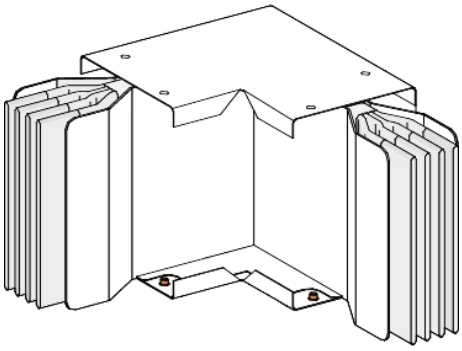

Main

Range	Canalis
Product name	KT
Product or component type	Elbow
Busbar description	Standard
Device short name	KTC
Device application	Change direction
Material	Copper
[Ie] rated operational current	1350 A at 35 °C
Polarity	3L + N + PER
Direction change type	Direction 1: flat to right
Operating angle	90 °
Earth conductor	Reinforced
Short-circuit level	Standard version
Provided equipment	Trunking unit Jointing unit

Complementary

Housing material	Polyester film
Contacts material	Copper
[Ue] rated operational voltage	1000 V
Network frequency	50/60 Hz
[Ui] rated insulation voltage	1000 V
[Icw] rated short-time withstand current	50 kA
[Ipk] rated peak withstand current	110 kA
Radiated magnetic field	0.5 µT
Thermal stress limit	2500000 kA².s
THDI	15…33 % 1000 A 0…15 % 1350 A
Maximum voltage drop	<0.0031 V with power factor = 1 at 50 Hz with 1A for 100 m long <0.0034 V with power factor = 0.9 at 50 Hz with 1A for 100 m long <0.0033 V with power factor = 0.8 at 50 Hz with 1A for 100 m long <0.0031 V with power factor = 0.7 at 50 Hz with 1A for 100 m long
Neutral position	Right
Standards	IEC 61439-1 IEC 61439-6
Dimension type	Made to measure
Width	140 mm
Height	104 mm
Length	Direction 1: 301…600 mm Direction 2: 301…1000 mm
Colour	White (RAL 9001)
Linear load	33 kg/m

The information provided in this documentation contains general descriptions and/or technical characteristics of the performance of the products contained herein.
This documentation is not intended as a substitute for and is not to be used for determining suitability or reliability of these products for specific user applications.
It is the duty of any such user or integrator to perform the appropriate and complete risk analysis, evaluation and testing of the products with respect to the relevant specific application or use thereof.
Neither Schneider Electric Industries SAS nor any of its affiliates or subsidiaries shall be responsible or liable for misuse of the information contained herein.

Environment

IP degree of protection	IP55 conforming to IEC 60529
IK degree of protection	IK08 conforming to IEC 62262
Derating factor	0…35 °C (100 % of In) 35…40 °C (95 % of In) 40…45 °C (90 % of In) 45…50 °C (84 % of In) 50…55 °C (79 % of In)

Packing Units

Unit Type of Package 1	PCE
Number of Units in Package 1	1
Package 1 Height	10.4 cm
Package 1 Width	65.0 cm
Package 1 Length	105.0 cm
Package 1 Weight	55.44 kg

Offer Sustainability

Sustainable offer status	Green Premium product
REACh Regulation	REACh Declaration
EU RoHS Directive	Compliant with Exemptions
Mercury free	Yes
China RoHS Regulation	China RoHS Declaration
RoHS exemption information	Yes
Environmental Disclosure	Product Environmental Profile
Circularity Profile	End Of Life Information
WEEE	The product must be disposed on European Union markets following specific waste collection and never end up in rubbish bins