Product data sheet
Characteristics

KTA3200ER32

Straight feed unit, Canalis KTA, aluminium, 3200A, 3L+PE, made to measure dimensions, neutral N2, white RAL9001

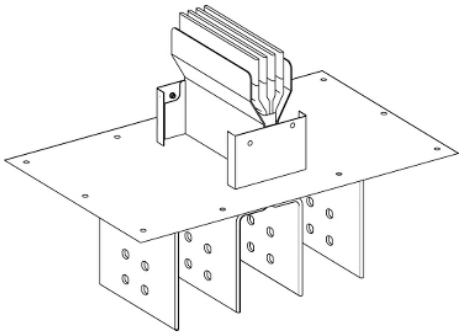

Main

Range	Canalis
Product name	KT
Product or component type	Straight feeder trunking
Device short name	KTA
Device application	Feeder length
Supply	Oil-immersed transformer Switchboard
Material	Aluminium
[Ie] rated operational current	3200 A at 35 °C
Neutral position	Left
Earth conductor	Standard earth
Short-circuit level	Standard version
Provided equipment	Trunking unit

Complementary

Housing material	Polyester film
Contacts material	Copper
[Ue] rated operational voltage	1000 V
Network frequency	50/60 Hz
[Ui] rated insulation voltage	1000 V
[Icw] rated short-time withstand current	86 kA
[Ipk] rated peak withstand current	189 kA
Radiated magnetic field	2.1 µT
Thermal stress limit	7396000 kA².s
THDI	0…15 % 3200 A 15…33 % 4000 A
Maximum voltage drop	<0.0018 V with power factor = 1 at 50 Hz with 1A for 100 m long <0.0019 V with power factor = 0.9 at 50 Hz with 1A for 100 m long <0.0018 V with power factor = 0.8 at 50 Hz with 1A for 100 m long <0.0017 V with power factor = 0.7 at 50 Hz with 1A for 100 m long
Mounting mode	By screws
Mounting support	Plate
Polarity	3L + PE
Number of tap-off outlets	0
Standards	IEC 61439-1 IEC 61439-6
Dimension type	Made to measure
Connection pitch	80…250 mm
Depth	510 mm
Height	Direction 1: 235…734 mm
Colour	White (RAL 9001)
Linear load	31 kg/m

The information provided in this documentation contains general descriptions and/or technical characteristics of the performance of the products contained herein.
This documentation is not intended as a substitute for and is not to be used for determining suitability or reliability of these products for specific user applications.
It is the duty of any such user or integrator to perform the appropriate and complete risk analysis, evaluation and testing of the products with respect to the relevant specific application or use thereof.
Neither Schneider Electric Industries SAS nor any of its affiliates or subsidiaries shall be responsible or liable for misuse of the information contained herein.

Environment

IP degree of protection	IP55 conforming to IEC 60529
IK degree of protection	IK08 conforming to IEC 62262
Derating factor	0…35 °C (100 % of In) 35…40 °C (97 % of In) 40…45 °C (93 % of In) 45…50 °C (90 % of In) 50…55 °C (86 % of In)

Packing Units

Unit Type of Package 1	PCE
Number of Units in Package 1	1
Package 1 Height	51.0 cm
Package 1 Width	95.0 cm
Package 1 Length	95.0 cm
Package 1 Weight	47.3 kg

Offer Sustainability

Sustainable offer status	Green Premium product
REACh Regulation	REACh Declaration
REACh free of SVHC	Yes
EU RoHS Directive	Compliant EU RoHS Declaration
Toxic heavy metal free	Yes
Mercury free	Yes
China RoHS Regulation	China RoHS Declaration
RoHS exemption information	Yes
Environmental Disclosure	Product Environmental Profile
Circularity Profile	End Of Life Information
WEEE	The product must be disposed on European Union markets following specific waste collection and never end up in rubbish bins
PVC free	Yes
Halogen content performance	Halogen free product