Product data sheet
Characteristics

BMXDAO1615H
Discrete output module, Modicon X80, 16 isolated triac outputs, 24 to 240V AC, for severe environments

Main

Range of product	Modicon X80
Product or component type	Discrete output module
Product specific application	For severe environments
Discrete output number	16 conforming to EN/IEC 61131-2
Discrete output type	Triac
Discrete output voltage	24...240 V 20...264 V AC
Discrete output current	1.2 A

Complementary

Network frequency	50/60 Hz
Network frequency limits	47…63 Hz
Sensor power supply	20...264 V
Current per channel	1.2 A at 60 °C 0.6 A at 70 °C
Maximum current per module	4 A 60 °C 2 A 70 °C
Maximum leakage current	1 MA at state 0 24 V 1 MA at state 0 48 V 2 MA at state 0 115 V 2.5 mA at state 0 240 V
Maximum voltage drop	<1.55 V at state 1
Insulation resistance	> 10 MOhm 500 V DC
Power dissipation in W	1.45 W
Response time on output	<= 10 ms resistive activation <= 10 ms resistive deactivation
Typical current consumption	61 MA at 3.3 V DC 50 mA at 24 V DC
MTBF reliability	500000 H
Protection type	1 external fuse4 A fast blow
Output overload protection	With varistor
Inrush current	30 A
Maximum current per output common	4 A
Output current limits	0.005…10 A
Status LED	1 LED (green) module operating (RUN) 1 LED per channel (green) channel diagnostic 1 LED (red) module error (ERR) 1 LED (red) module I/O
Net weight	0.264 kg

The information provided in this documentation contains general descriptions and/or technical characteristics of the performance of the products contained herein.
This documentation is not intended as a substitute for and is not to be used for determining suitability or reliability of these products for specific user applications.
It is the duty of any such user or integrator to perform the appropriate and complete risk analysis, evaluation and testing of the products with respect to the relevant specific application or use thereof.
Neither Schneider Electric Industries SAS nor any of its affiliates or subsidiaries shall be responsible or liable for misuse of the information contained herein.

Environment

IP degree of protection	IP20
Environmental characteristic	Gas resistant class Gx Gas resistant class 3C4 Dust resistant class 3S4 Sand resistant class 3S4 Salt resistant level 2 Mold growth resistant class 3B2
Dielectric strength	3000 V AC at 50/60 Hz 1 min
Vibration resistance	3 gn
Shock resistance	30 gn
Ambient air temperature for storage	-40…85 °C
Ambient air temperature for operation	-25…70 °C
Relative humidity	0…95 % at -25…70 °C without condensation
Protective treatment	Conformal coating
Operating altitude	0...2000 m 2000...5000 m with derating factor

Packing Units

Unit Type of Package 1	PCE
Number of Units in Package 1	1
Package 1 Height	5.600 cm
Package 1 Width	18.000 cm
Package 1 Length	26.200 cm
Package 1 Weight	410.000 g
Unit Type of Package 2	S03
Number of Units in Package 2	8
Package 2 Height	30.000 cm
Package 2 Width	30.000 cm
Package 2 Length	40.000 cm
Package 2 Weight	3.757 kg

Offer Sustainability

Sustainable offer status	Green Premium product
REACh Regulation	REACh Declaration
EU RoHS Directive	Pro-active compliance (Product out of EU RoHS legal scope)
Mercury free	Yes
China RoHS Regulation	China RoHS Declaration
RoHS exemption information	Yes
Environmental Disclosure	Product Environmental Profile
Circularity Profile	End Of Life Information
WEEE	The product must be disposed on European Union markets following specific waste collection and never end up in rubbish bins

Dimensions

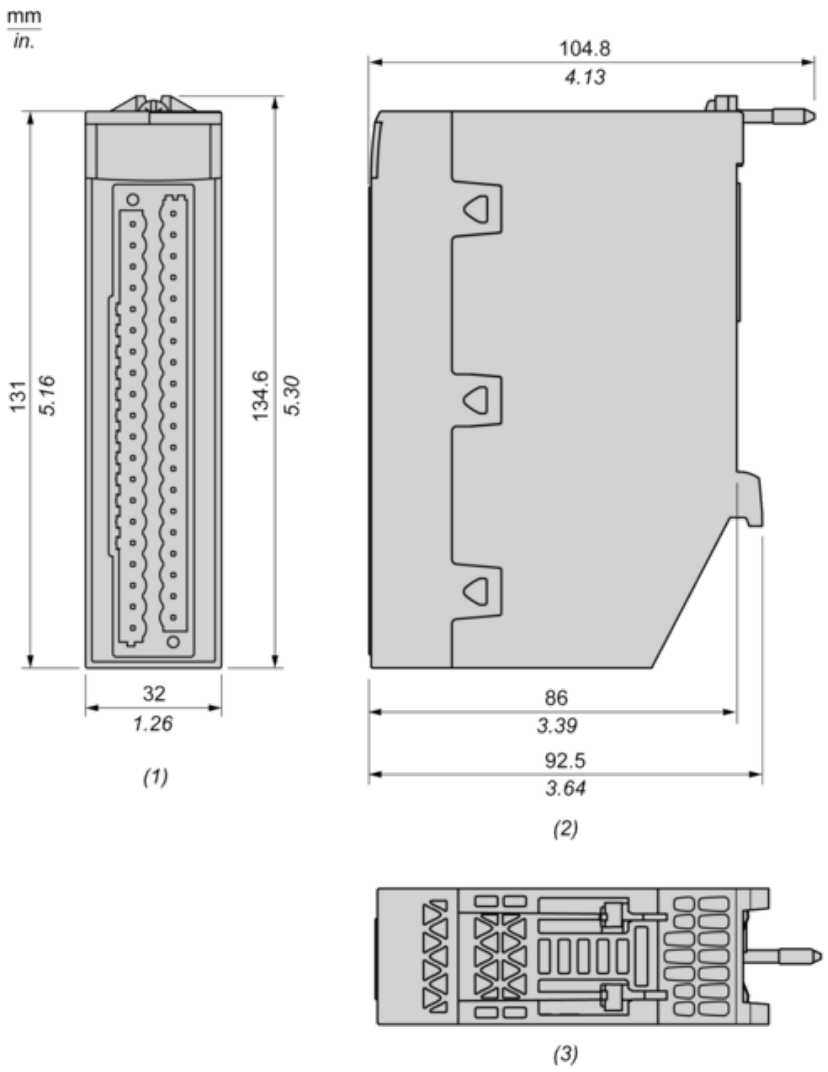

(1) Front view
(2) Right view
(3) Top view

Connecting the Module

Output Circuit Diagram

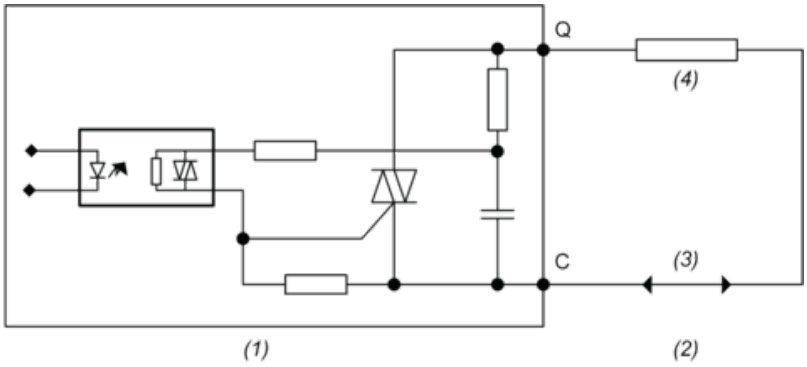

(1) Module
(2) Output
(3) Power supply
(4) Pre-actuator

Module Connection

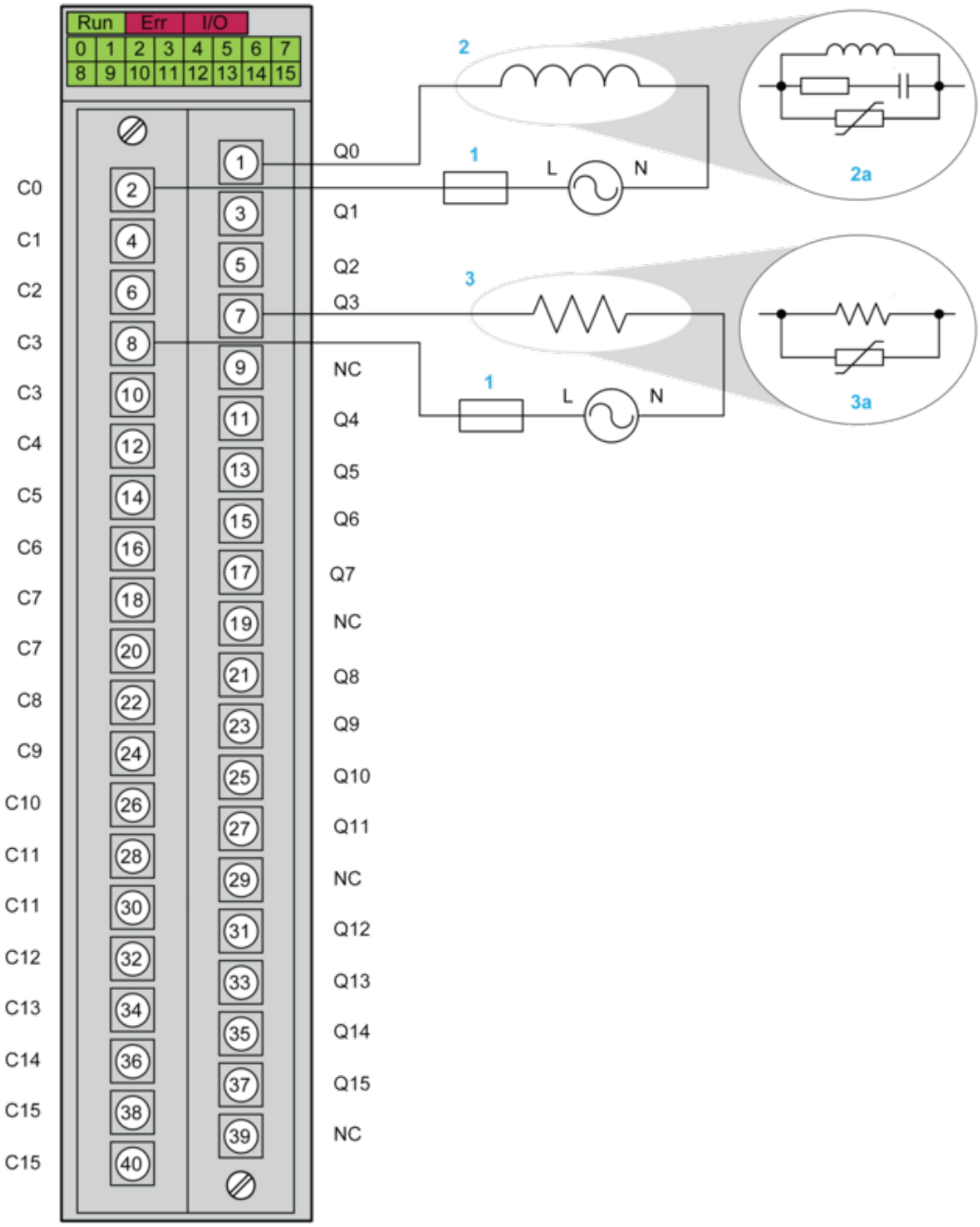

NC: Not connected

1 : 4 A fast blow fuse

2 : Inductive load

3 : Resistive load

2a and 3a : Recommended output protection