Product data sheet
Characteristics

ATV212WD55N4
variable speed drive ATV212 - 55kW - 75hp - 480V - 3ph - EMC class C2 - IP55

Main

Range of product	Altivar 212
Product or component type	Variable speed drive
Device short name	ATV212
Product destination	Asynchronous motors
Product specific application	Pumps and fans in HVAC
Assembly style	With heat sink
Network number of phases	3 phases
Motor power kW	55 kW
Motor power hp	75 hp
[Us] rated supply voltage	380...480 V - 15...10 %
Supply voltage limits	323…528 V
Supply frequency	50...60 Hz - 5...5 %
EMC filter	Class C2 EMC filter integrated
Line current	102.7 A at 380 V 89 A at 480 V

Complementary

Apparent power	76.3 kVA at 380 V
Prospective line Isc	22 kA
Continuous output current	116 A at 380 V 116 A at 460 V
Maximum transient current	127.6 A for 60 s
Speed drive output frequency	0.5…200 Hz
Nominal switching frequency	8 kHz
Switching frequency	6...16 kHz adjustable 8...16 kHz with derating factor
Speed range	1…10
Speed accuracy	+/- 10 % of nominal slip 0.2 Tn to Tn
Torque accuracy	+/- 15 %
Transient overtorque	120 % of nominal motor torque +/- 10 % for 60 s
Asynchronous motor control profile	Voltage/Frequency ratio, automatic IR compensation (U/f + automatic Uo) Voltage/Frequency ratio, 5 points Voltage/Frequency ratio - Energy Saving, quadratic U/f Flux vector control without sensor, standard Voltage/frequency ratio, 2 points
Regulation loop	Adjustable PI regulator
Motor slip compensation	Adjustable Not available in voltage/frequency ratio motor control Automatic whatever the load
Local signalling	1 LED (red) for DC bus energized
Output voltage	<= power supply voltage
Isolation	Electrical between power and control
Type of cable	Without mounting kit: 1 wire(s)IEC cable at 45 °C, copper 90 °C / XLPE/EPR Without mounting kit: 1 wire(s)IEC cable at 45 °C, copper 70 °C / PVC With UL Type 1 kit: 3 wire(s)UL 508 cable at 40 °C, copper 75 °C / PVC
Electrical connection	VIA, VIB, FM, FLA, FLB, FLC, RY, RC, F, R, RES: terminal 2.5 mm² / AWG 14 L1/R, L2/S, L3/T: terminal 150 mm² (300 kcmil)

The information provided in this documentation contains general descriptions and/or technical characteristics of the performance of the products contained herein.
This documentation is not intended as a substitute for and is not to be used for determining suitability or reliability of these products for specific user applications.
It is the duty of any such user or integrator to perform the appropriate and complete risk analysis, evaluation and testing of the products with respect to the relevant specific application or use thereof.
Neither Schneider Electric Industries SAS nor any of its affiliates or subsidiaries shall be responsible or liable for misuse of the information contained herein.

Tightening torque	0.6 N.M (VIA, VIB, FM, FLA, FLB, FLC, RY, RC, F, R, RES) 41 N.m, 360 lb.in (L1/R, L2/S, L3/T)
Supply	Internal supply for reference potentiometer (1 to 10 kOhm): 10.5 V DC +/- 5 %, <10 A, protection type: overload and short-circuit protection Internal supply: 24 V DC (21…27 V), <200 A, protection type: overload and short-circuit protection
Analogue input number	2
Analogue input type	VIA switch-configurable voltage: 0...10 V DC 24 V max, impedance: 30000 Ohm, resolution 10 bits VIB configurable voltage: 0...10 V DC 24 V max, impedance: 30000 Ohm, resolution 10 bits VIB configurable PTC probe: 0...6 probes, impedance: 1500 Ohm VIA switch-configurable current: 0...20 mA, impedance: 250 Ohm, resolution 10 bits
Sampling duration	2 Ms +/- 0.5 ms F discrete 2 Ms +/- 0.5 ms R discrete 2 Ms +/- 0.5 ms RES discrete 3.5 Ms +/- 0.5 ms VIA analog 22 ms +/- 0.5 ms VIB analog
Response time	FM 2 ms, tolerance +/- 0.5 ms for analog output(s) FLA, FLC 7 ms, tolerance +/- 0.5 ms for discrete output(s) FLB, FLC 7 ms, tolerance +/- 0.5 ms for discrete output(s) RY, RC 7 ms, tolerance +/- 0.5 ms for discrete output(s)
Accuracy	+/- 0.6 % (VIA) for a temperature variation 60 °C +/- 0.6 % (VIB) for a temperature variation 60 °C +/- 1 % (FM) for a temperature variation 60 °C
Linearity error	VIA: +/- 0.15 % of maximum value for input VIB: +/- 0.15 % of maximum value for input FM: +/- 0.2 % for output
Analogue output number	1
Analogue output type	FM switch-configurable voltage 0...10 V DC, impedance: 7620 Ohm, resolution 10 bits FM switch-configurable current 0...20 mA, impedance: 970 Ohm, resolution 10 bits
Discrete output number	2
Discrete output type	Configurable relay logic: (FLA, FLC) NO - 100000 cycles Configurable relay logic: (FLB, FLC) NC - 100000 cycles Configurable relay logic: (RY, RC) NO - 100000 cycles
Minimum switching current	3 mA at 24 V DC for configurable relay logic
Maximum switching current	5 A at 250 V AC on resistive load - cos phi = 1 - L/R = 0 ms (FL, R) 5 A at 30 V DC on resistive load - cos phi = 1 - L/R = 0 ms (FL, R) 2 A at 250 V AC on inductive load - cos phi = 0.4 - L/R = 7 ms (FL, R) 2 A at 30 V DC on inductive load - cos phi = 0.4 - L/R = 7 ms (FL, R)
Discrete input type	F programmable 24 V DC, with level 1 PLC, impedance: 4700 Ohm R programmable 24 V DC, with level 1 PLC, impedance: 4700 Ohm RES programmable 24 V DC, with level 1 PLC, impedance: 4700 Ohm
Discrete input logic	Positive logic (source) (F, R, RES), <= 5 V (state 0), >= 11 V (state 1) Negative logic (sink) (F, R, RES), >= 16 V (state 0), <= 10 V (state 1)
Acceleration and deceleration ramps	Automatic based on the load Linear adjustable separately from 0.01 to 3200 s
Braking to standstill	By DC injection
Protection type	Overheating protection: drive Thermal power stage: drive Short-circuit between motor phases: drive Input phase breaks: drive Overcurrent between output phases and earth: drive Overvoltages on the DC bus: drive Break on the control circuit: drive Against exceeding limit speed: drive Line supply overvoltage and undervoltage: drive Line supply undervoltage: drive Against input phase loss: drive Thermal protection: motor Motor phase break: motor With PTC probes: motor
Dielectric strength	3535 V DC between earth and power terminals 5092 V DC between control and power terminals
Insulation resistance	>= 1 mOhm 500 V DC for 1 minute
Frequency resolution	Display unit: 0.1 Hz Analog input: 0.024/50 Hz

Life Is On Schneider Electric

Communication port protocol	METASYS N2 BACnet Modbus APOGEE FLN LonWorks
Connector type	1 RJ45 1 open style
Physical interface	2-wire RS 485
Transmission frame	RTU
Transmission rate	9600 bps or 19200 bps
Data format	8 bits, 1 stop, odd even or no configurable parity
Type of polarization	No impedance
Number of addresses	1…247
Communication service	Read device identification (43) Monitoring inhibitable Time out setting from 0.1 to 100 s Write single register (06) Read holding registers (03) 2 words maximum Write multiple registers (16) 2 words maximum
Option card	Communication card for LonWorks
Operating position	Vertical +/- 10 degree
Width	362 mm
Height	1000 mm
Depth	364 mm
Functionality	Mid
Specific application	HVAC
IP degree of protection	IP55

Environment

Electromagnetic compatibility	Electrostatic discharge immunity test level 3 conforming to IEC 61000-4-2 Radiated radio-frequency electromagnetic field immunity test level 3 conforming to IEC 61000-4-3 Electrical fast transient/burst immunity test level 4 conforming to IEC 61000-4-4 1.2/50 µs - 8/20 µs surge immunity test level 3 conforming to IEC 61000-4-5 Conducted radio-frequency immunity test level 3 conforming to IEC 61000-4-6 Voltage dips and interruptions immunity test conforming to IEC 61000-4-11
Pollution degree	3 conforming to IEC 61800-5-1
IP degree of protection	IP55 conforming to EN/IEC 61800-5-1 IP55 conforming to EN/IEC 60529
Vibration resistance	1.5 mm (f= 3…13 Hz) conforming to EN/IEC 60068-2-6 1 gn (f= 13…200 Hz) conforming to EN/IEC 60068-2-8
Shock resistance	15 gn for 11 ms conforming to IEC 60068-2-27
Environmental characteristic	Classes 3C1 conforming to IEC 60721-3-3 Classes 3S2 conforming to IEC 60721-3-3
Noise level	63.7 dB conforming to 86/188/EEC
Operating altitude	1000...3000 m limited to 2000 m for the Corner Grounded distribution network with current derating 1 % per 100 m <= 1000 m without derating
Relative humidity	5…95 % without condensation conforming to IEC 60068-2-3 5…95 % without dripping water conforming to IEC 60068-2-3
Ambient air temperature for operation	-10…40 °C (without derating) 40…50 °C (with derating factor)
Ambient air temperature for storage	-25…70 °C

Standards	IEC 61800-3 environments 1 category C1 EN 61800-3 environments 1 category C3 EN 61800-3 IEC 61800-3 environments 1 category C3 IEC 61800-3 environments 1 category C2 EN 61800-5-1 IEC 61800-3 environments 2 category C1 EN 61800-3 environments 2 category C1 EN 55011 class A group 1 IEC 61800-5-1 IEC 61800-3 EN 61800-3 environments 2 category C3 EN 61800-3 environments 1 category C2 IEC 61800-3 environments 2 category C3 EN 61800-3 category C2 IEC 61800-3 environments 2 category C2 IEC 61800-3 category C2 IEC 61800-3 category C3 EN 61800-3 category C3 EN 61800-3 environments 1 category C1 EN 61800-3 environments 2 category C2
Product certifications	CSA UL C-Tick NOM 117
Marking	CE

Packing Units

Unit Type of Package 1	PCE
Number of Units in Package 1	1
Package 1 Weight	66 kg
Package 1 Height	44 cm
Package 1 width	46 cm
Package 1 Length	111.4 cm

Offer Sustainability

Sustainable offer status	Green Premium product
REACh Regulation	REACh Declaration
EU RoHS Directive	Pro-active compliance (Product out of EU RoHS legal scope) EU RoHS Declaration
Mercury free	Yes
RoHS exemption information	Yes
China RoHS Regulation	China RoHS Declaration
Environmental Disclosure	Product Environmental Profile
Circularity Profile	End Of Life Information
WEEE	The product must be disposed on European Union markets following specific waste collection and never end up in rubbish bins

Contractual warranty

Warranty	18 months

ATV212WD55N4

Dimensions

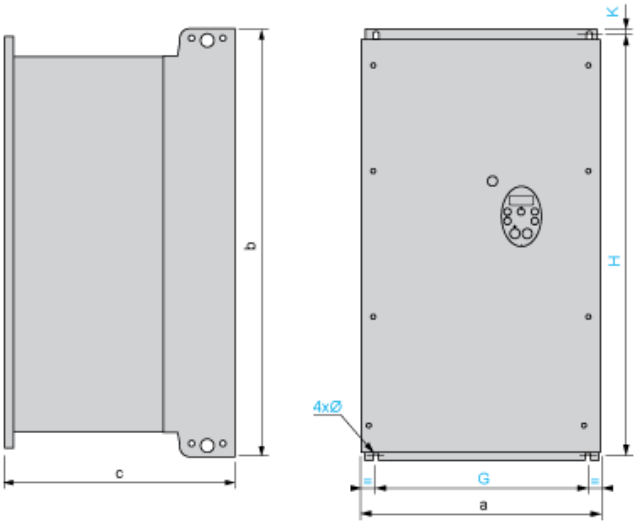

Dimensions in mm

ATV212W	a	b	c	G	H	K	ø
D11N4, D15N4 D11N4C, D15N4C	290	560	315	250	544	8	6
D18N4 D18N4C	310	665	315	270	650	10	6
D22N4, D30N4 D22N4C, D30N4C	284	720	315	245	700	10	7
D37N4, D45N4 D37N4C, D45N4C	284	880	343	245	860	10	7
D55N4, D75N4 D55N4C, D75N4C	362	1000	364	300	975	10	9

Dimensions in in.

ATV212W	a	b	c	G	H	K	ø
D11N4, D15N4 D11N4C, D15N4C	11.42	22.05	12.40	9.84	21.42	0.31	0.24
D18N4 D18N4C	12.20	26.18	12.40	10.63	25.59	0.39	0.24
D22N4, D30N4 D22N4C, D30N4C	11.18	28.35	12.40	9.65	27.56	0.39	0.27
D37N4, D45N4 D37N4C, D45N4C	11.18	34.65	13.50	9.65	33.86	0.39	0.27
D55N4, D75N4 D55N4C, D75N4C	14.25	39.37	14.33	11.81	38.39	0.39	0.35

Mounting Recommendations

Clearance

Depending on the conditions in which the drive is to be used, its installation will require certain precautions and the use of appropriate accessories.

Install the unit vertically:

- Do not place it close to heating elements.
- Leave sufficient free space to ensure that the air required for cooling purposes can circulate from bottom to the top of the unit.

Type A Mounting

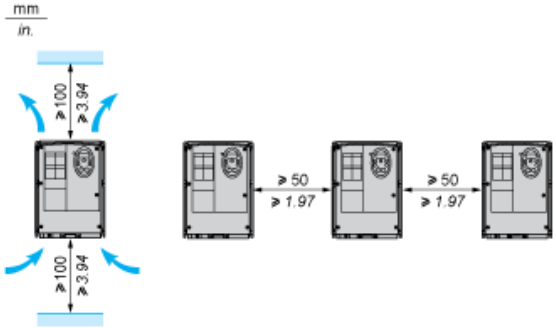

Recommended Wiring Diagram

3-Phase Power Supply

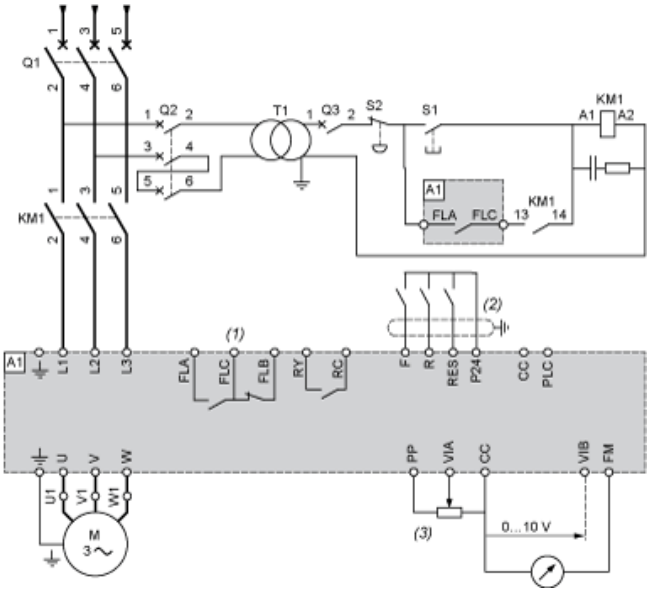

A1: ATV 212 drive
KM1: Contactor
Q1: Circuit breaker
Q2: GV2 L rated at twice the nominal primary current of T1
Q3: GB2CB05
S1, XB4 B or XB5 A pushbuttons
S2:
T1: 100 VA transformer 220 V secondary
(1) Fault relay contacts for remote signalling of the drive status
(2) Connection of the common for the logic inputs depends on the positioning of the switch (Source, PLC, Sink)
(3) Reference potentiometer SZ1RV1202

NOTE: All terminals are located at the bottom of the drive. Install interference suppressors on all inductive circuits near the drive or connected on the same circuit, such as relays, contactors, solenoid valves, fluorescent lighting, etc.

Switches (Factory Settings)

Voltage/current selection for analog I/O (VIA and VIB)

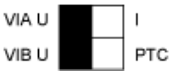

Voltage/current selection for analog I/O (FM)

Selection of logic type

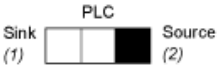

(1) negative logic
(2) positive logic

Other Possible Wiring Diagrams

Logic Inputs According to the Position of the Logic Type Switch

"Source" position

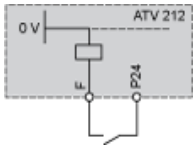

"Sink" position

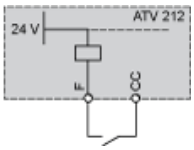

"PLC" position with PLC transistor outputs	
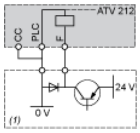 (1) PLC	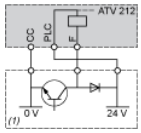 (1) PLC

2-wire control

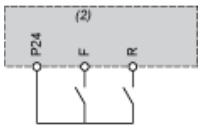

F: Forward
R: Preset speed
(2) ATV 212 control terminals

3-wire control

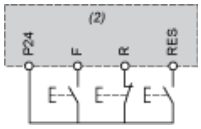

F: Forward
R: Stop
RES: Reverse
(2) ATV 212 control terminals

PTC probe

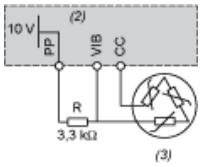

(2) ATV 212 control terminals
(3) Motor

Analog Inputs

Voltage analog inputs

External +10 V	
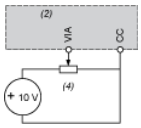 (2) ATV 212 control terminals (4) Speed reference potentiometer 2.2 to 10 kΩ	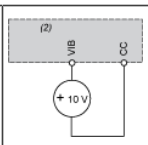 (2) ATV 212 control terminals

Analog input configured for current: 0-20 mA, 4-20 mA, X-Y mA

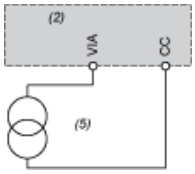

(2) ATV 212 control terminals
(5) Source 0-20 mA, 4-20 mA, X-Y mA

Analog input VIA configured as positive logic input (“Source” position)

(2) ATV 212 control terminals

Analog input VIA configured as negative logic input (“Sink” position)

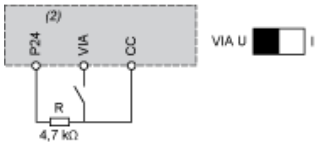

(2) ATV 212 control terminals

Derating Curves

The derating curves for the drive nominal current (In) depend on the temperature and the switching frequency.
For intermediate temperatures (45°C for example), interpolate between 2 curves.

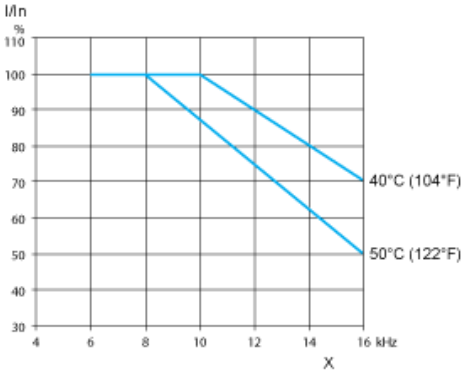

X Switching frequency